0-6-2 TANK LOCOMOTIVE 2-RAIL AND 3-RAIL

No. 2217 2-RAIL AND No. 3217 3-RAIL

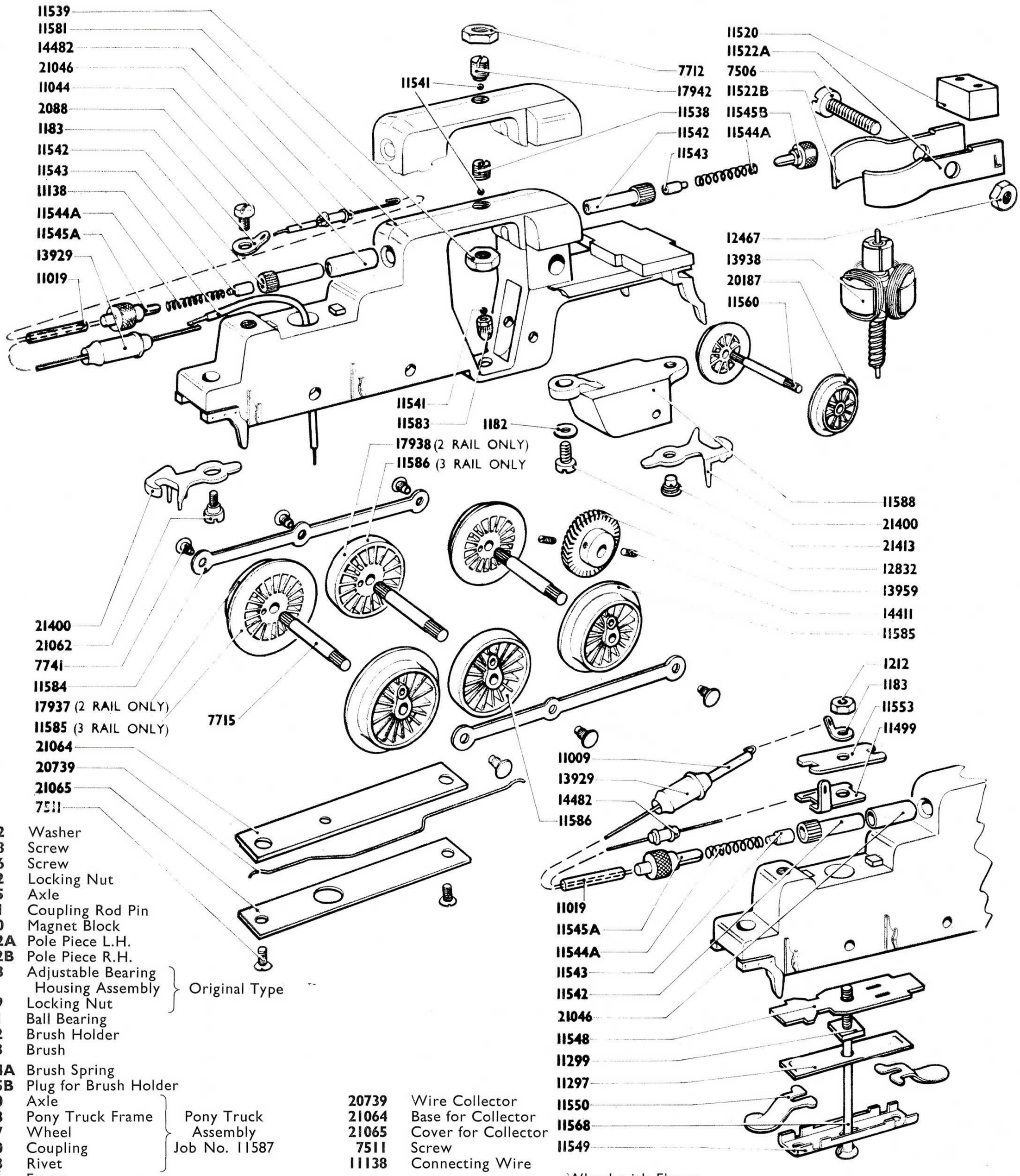

1182	Washer
2088	Screw
7506	Screw
7712	Locking Nut
7715	Axle
7741	Coupling Rod Pin
11520	Magnet Block
11522A	Pole Piece L.H.
11522B	Pole Piece R.H.
11538	Adjustable Bearing Housing Assembly } Original Type
11539	Locking Nut } Original Type
11541	Ball Bearing
11542	Brush Holder
11543	Brush
11544A	Brush Spring
11545B	Plug for Brush Holder
11560	Axle } Pony Truck Assembly Job No. 11587
11588	Pony Truck Frame } Pony Truck Assembly Job No. 11587
20187	Wheel } Pony Truck Assembly Job No. 11587
21400	Coupling } Pony Truck Assembly Job No. 11587
21413	Rivet } Pony Truck Assembly Job No. 11587
11581	Frame
11583	Bottom Bearing
11584	Coupling Rod
11585	Wheel with Flange
11586	Wheel without Flange
12467	Nut
12832	Screw
13938	Armature Shaft Assembly
13959	Worm Wheel
14411	Grub Screw
17942	Adjustable Bearing Housing Assembly
21046	Insulating Sleeve
21062	Screw

2-RAIL

1183	Soldering Tag } Condenser Assembly Job No. 18004
11019	P.V.C. Sleeve } Condenser Assembly Job No. 18004
11044	P.V.C. Sleeve } Condenser Assembly Job No. 18004
11545A	Plug for Brush Holder } Condenser Assembly Job No. 18004
13929	Choke } Condenser Assembly Job No. 18004
14482	Condenser } Condenser Assembly Job No. 18004

20739	Wire Collector
21064	Base for Collector
21065	Cover for Collector
7511	Screw
11138	Connecting Wire
20690	Insulating Bush } Wheel with Flange (with Insulating Bush) Assembly Job No. 17937
20692	Wheel with Flange —Insulated } Wheel with Flange (with Insulating Bush) Assembly Job No. 17937
20690	Insulating Bush } Wheel without Flange (with Insulating Bush) Assembly Job. No. 17938
20693	Wheel without Flange—Insulated } Wheel without Flange (with Insulating Bush) Assembly Job. No. 17938

ASSEMBLIES

11571	Housing Assembly
21061	Chassis Assembly Complete

3-RAIL

1183	Soldering Tag—1 off } Condenser Assembly Job No. 17795
11009	P.V.C. Sleeve } Condenser Assembly Job No. 17795
11019	P.V.C. Sleeve } Condenser Assembly Job No. 17795
11499	Earthing Plate } Condenser Assembly Job No. 17795
11545A	Plug for Brush Holder } Condenser Assembly Job No. 17795
13929	Choke } Condenser Assembly Job No. 17795
14482	Condenser } Condenser Assembly Job No. 17795

1183	Soldering Tag—2 off } Condenser Assembly Job No. 18527
11009	P.V.C. Sleeve } Condenser Assembly Job No. 18527
11019	P.V.C. Sleeve } Condenser Assembly Job No. 18527
11545A	Plug for Brush Holder } Condenser Assembly Job No. 18527
13929	Choke } Condenser Assembly Job No. 18527
14482	Condenser } Condenser Assembly Job No. 18527
1212	Nut
11297	Collector Shoe Spring
11299	Distance Piece
11548	Insulator for Collector Shoe Holder
11549	Collector Shoe Holder
11550	Collector Shoe
11553	Insulator
11568	Special Screw

ASSEMBLIES

11571	Housing Assembly
11580	Chassis Assembly Complete

MECCANO LTD · BINNS ROAD · LIVERPOOL

72856/02

Printed in England